PARTS FOR:

ARC WELDER 140Amp with ACCESSORY KIT

ARC WELDER 160Amp with ACCESSORY KIT

MODEL: **140XT.V2 & 160XT.V2**

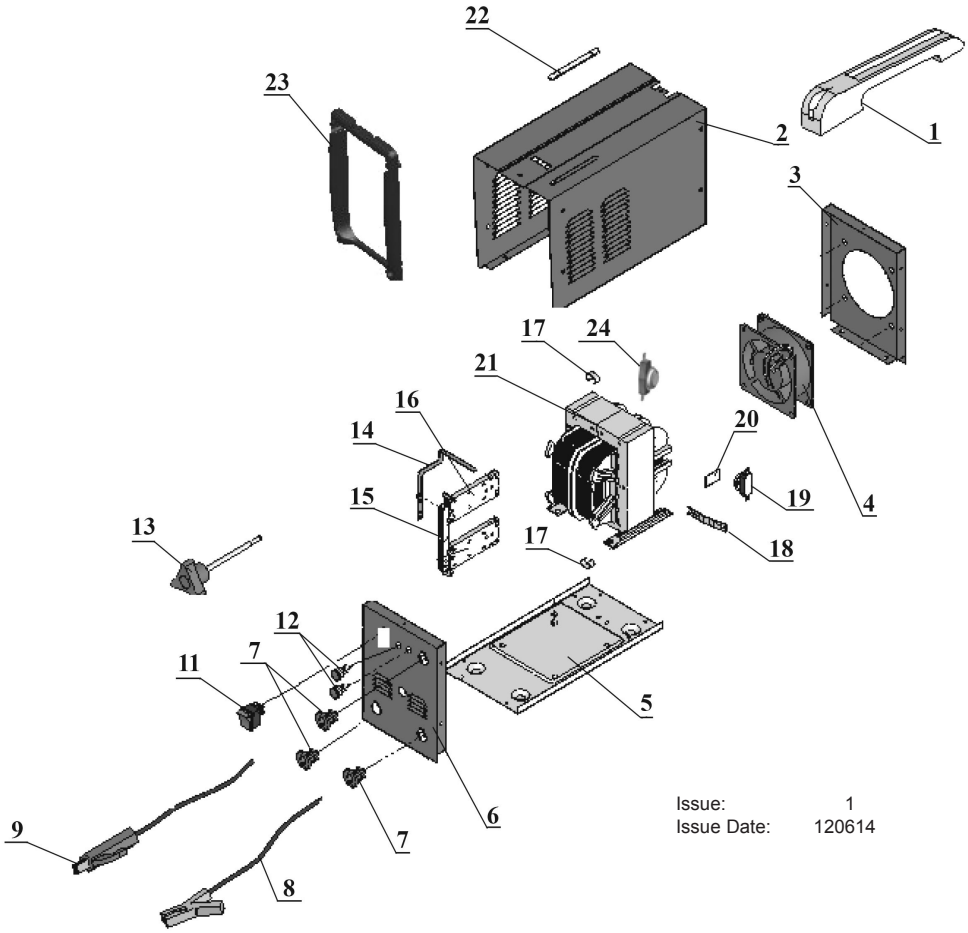

Issue: 1
Issue Date: 120614

ITEM	PART NO	DESCRIPTION	ITEM	PART NO	DESCRIPTION
1	140XT.01	HANDLE	14	140XT.14	POINTER
2	140XT.02	CASE (**140XT.V2 ONLY**)	15	140XT.15	SHUNT BRACKET
--	160XT.02	CASE (**160XT.V2 ONLY**)	16	140XT.16	SHUNT
3	140XT.03	BACK PANEL	17	140XT.17	CLIP
4	140XT.04	FAN	18	140XT.18	POLE FIXER
5	140XT.05	BOTTOM PANEL	19	140XT.19	HEAT RELAY
6	140XT.06	FRONT PANEL (**140XT.V2 ONLY**)	20	140XT.20	HEAT CONDUCTOR
--	160XT.06	FRONT PANEL (**160XT.V2 ONLY**)	21	140XT.21	TRANSFORMER (**140XT.V2 ONLY**)
7	140XT.07	POWER CORD HOLDER	--	160XT.21	TRANSFORMER (**160XT.V2 ONLY**)
8	140XT.08	WORK CLAMP	22	140XT.22	TRANSPARENT PLATE
9	140XT.09	ELECTRODE HOLDER CABLE	23	140XT.23	FRAME
11	140XT.11	MAIN SWITCH	--	140XT.24	CHIPPING HAMMER/WIRE BRUSH (**not shown**)
12	140XT.12	INDICATOR	24	140XT.V2-24	HEAT RELAY
13	140XT.13	HAND WHEEL			

NOTE: *It is our policy to continually improve products and as such we reserve the right to alter data, specifications and component parts without prior notice.*
IMPORTANT: No liability is accepted for incorrect use of product.
WARRANTY: Guarantee is 12 months from purchase date, proof of which will be required for any claim.
INFORMATION: For a copy of our latest catalogue and promotions call us on 01284 757525 and leave your full name and address, including postcode.

Sole UK Distributor,
Sealey Group, Kempson Way,
Suffolk Business Park,
Bury St Edmunds, Suffolk, IP32 7AR

01284 757500
01284 703534

www.sealey.co.uk
sales@sealey.co.uk